NOAA
S 221

NUMBER AND ORDER OF PLANS

Nº	SHEET TITLE
1	TITLE SHEET
2	DATA SHEET
3	STARBOARD OUTBOARD PROFILE
4	INBOARD PROFILE
5	PLAN OF "A" DECK INNERBOTTOM
6	PLAN OF "B" TANK TOP
7	PLAN OF "C" 2ND DECK
8	PLAN OF "D" MAIN DECK
9	PLAN OF "E" SUPERSTRUCTURE
10	PLAN OF "F" NAVIGATION BRIDGE
11	PLAN OF "G" TOP OF HOUSE

REVISIONS

REV	SHT	ZONE	ITEM	DESCRIPTION	DATE	APPD
A				THIS REVISION ACCOMPLISHED TO INCORPORATE THE INSTALLATION OF A NEW TRANSVERSE BULKHEAD AT FRAME 23 BELOW THE INNERBOTTOM PLATING AND NEW SOUND ROOM NO. 3	R. HERMES, 05/04/99	
	ALL			ADDED NOAA CAGE CODE AND MODIFIED CAD FILENAME		
	1			ADDED REVISION BLOCK		
	2			MODIFIED THE FUEL CAPACITY		
	4,5			ADDED NEW TRANSV BHD AND NOTATION FOR NEW NO. 3 SOUND RM		
	5,6			ADDED MANHOLES PROVIDING ACCESS TO NEW NO. 3 SOUND ROOM		

ART ANDERSON
ASSOCIATES
148 FIRST STREET BREMERTON, WA 98310
(206) 479-5600 FAX 479-5605
65 MARION STREET SEATTLE, WA 98104
(206) 622-6221

NATIONAL OCEANIC AND ATMOSPHERIC ADMINISTRATION
OFFICE OF NOAA CORPS OPERATIONS

	SIGNATURE	DATE
DRAWN BY	C.FORSTER	6/14/93
CHECKED BY	C.STAEHLI	6/14/93
PROJ ENGR	C.STAEHLI	6/14/93
CHIEF ENGR	J.CARLSON	6/14/93

TAR AAA-FMP-002(93)

APPROVALS

SCALE: NONE

RAINIER S-221

GENERAL PLANS

MA DESIGN S2-MA-72A

SIZE	NOAA CAGE	NOAA DRAWING NUMBER	REV
H	OYLJ5	S0900-2-2	A

CAD FILENAME TITLE_A.DWG

SHEET 1 OF 11

SNUM

SQ FT

AREA

GENERAL CHARACTERISTICS

LENGTH OVERALL	231'–0"
LENGTH BETWEEN PERPENDICULARS	198'–0"
LENGTH DESIGN LOAD LINE	197'–0"
BREADTH (MOLDED)	42'–0"
DEPTH (MOLDED)	20'–0"
DEADWEIGHT	974 TONS
DISPLACEMENT	1,800 TONS
GROSS TONNAGE	1,591 TONS
NET TONNAGE	578 TONS
SPEED (CRUISE)	11 KNOTS
SPEED (MAX)	14.5 KNOTS

COMPLIMENT

COMMISSIONED OFFICERS	10
LICENSED OFFICERS	4
CREW	52
SCIENTISTS	4

GENERAL INFORMATION

LAUNCHED	MARCH 1967
DELIVERED	APRIL 1968
COMMISSIONED	OCTOBER 1968
CALL LETTERS	WTEF
DESIGNER	MARITIME ADMINISTRATION
BUILDER	AEROJET–GENERAL SHIPYARDS JACKSONVILLE,FL.
SISTER SHIPS	FAIRWEATHER, MT. MITCHELL
HOME PORT	SEATTLE, WA
HULL	WELDED STEEL\ICE STRENGTHENED
ENDURANCE	22 DAYS
ENDURANCE CONSTRAINT	STABILITY
RANGE	5,898 NM

HABITABILITY

SINGLE STATEROOMS	5
DOUBLE STATEROOMS	18
FOUR BUNK ROOMS	9
TOTAL BUNKS	79

FOOD–SERVICE SEATING

CAPTAIN'S CABIN	4
WARDROOM	12
SHIP'S OFFICER'S MESS	11
TECHNICIAN'S MESS	18
CREW'S MESS	18

SCIENTIFIC LABORATORY FACILITIES

DRY OCEANOGRAPHIC LAB	240 Sq Ft

FRESHWATER SYSTEM

EVAPORATORS (CUNO ENGINEERING)	2
MAXIMUM PRODUCTION	6,500 GPD
NORMAL CONSUMPTION	3,500 GPD
STORAGE CAPACITY	16,000 GALLONS

FUEL SYSTEM

FUEL TYPE	#2 DIESEL
FUEL CONSUMPTION	120 GPH
FUEL CAPACITY	115,895 GALLONS

SEWAGE WASTE CONTROL

SYTEM TYPE	ELECTROCATALYTIC
MANUFACTURER	SIGMA CHAPMAN INC.
HOLDING CAPACITY	8,000 GALLONS

OILY WASTE CONTROL

SYSTEM TYPE	OILY WATER SEPERATOR
MANUFACTURER	SRS
HOLDING CAPACITY	1,700 GALLONS

MISC. EQUIPMENT

STOCKLESS ANCHOR\3,000 LBS (EA)	3
1 3/8" STUD LINK CHAIN (165 FATHOMS)	2
GRAVITY DAVITS (SETS)	6
LIFE RAFTS (CAPACITY EACH SIDE)	100%

DECK MACHINERY

TYPE	MANUFACTURER	PULL\CAPACITY	QTY
OCEANOGRAPHIC WINCH	NORTHERN LINE	1,000 POUNDS	1
FIXED LENGTH CRANE	SKAGIT	5,000 POUNDS	1
TELESCOPING BOOM CRANE	SKAGIT	2,500 POUNDS	2
MOVABLE A–FRAME (PORT & STBD)	– –	2,000 POUNDS	2
DREDGE & TRAWL	NORTHERN LINE	3,000 POUNDS	1

ENGINEERING

TYPE	MANUFACTURER	RATING	QTY
MAIN PROPULSION (GEARED DIESEL)	GENERAL MOTORS	1,200 HP (EA)	2
AUXILIARY PROPULSION (BOW THRUSTER)	DETROIT DIESEL\BIRD JOHNSON	200 HP	1
PROPELLERS (3 BLADE\CONTROLLABLE PITCH)	BIRD JOHNSON	8'–6" DIAMETER	2
SHIP'S SERVICE GENERATORS (450 VAC)	DETROIT DIESEL\GE	300 KW	2
EMERGENCY GENERATOR (450 VAC)	DETROIT DIESEL\GE	75 KW	1
STEERING GEAR (ELECTRO–HYDRAULIC)	LIGERWOOD	– –	1

NOTE: ELECTRICAL SERVICE: 450 VAC 3 PHASE; 120 VAC 3 PHASE; 120 VAC SINGLE PHASE

LAUNCHES & SMALL BOATS

TYPE	PROPULSION	LENGTH	QTY
ALUMINUM OPEN BOAT (MONARK)	GASOLINE OUTBOARD	17 FEET	1
FIBERGLASS OPEN BOAT (BOSTON WHALER)	GASOLINE OUTBOARD	16 FEET	2
INFLATABLE RUBBER (ZODIAC)	GASOLINE OUTBOARD	17 FEET	1
TYPE I ALUMINUM (JENSEN)	DIESEL	29 FEET	4

ELECTRONICS

COMMUNICATIONS

- VHF\FM TRANSCEIVERS
- HF TRANSCEIVERS
- EPIRB'S
- EMERGENCY RADIO AUTO ALARM
- PORTABLE EMERGENCY TRANSCEIVER
- WEATHER FACSIMILE RECEIVER
- GPS
- INMARSAT

ACOUSTICS

- DEEPWATER ECHO SOUNDER
- SHALLOW–WATER ECHO SOUNDER
- HYDROGRAPHIC SURVEY SOUNDERS
- SIDE SCAN SONAR

NAVIGATION

- RADAR
- GYROCOMPASS
- LORAN
- PRECISION POSITIONING EQUIPMENT

SCIENTIFIC EQUIPMENT

- CTD SYSTEM (SHALLOW WATER)
- XBT SYSTEM
- SHIPBOARD ENVIRONMENTAL ACQUISITION SYSTEM (SEAS)

ABS CLASSIFICATION A1 Ⓔ ICE STRENGTHENED

ART ANDERSON ASSOCIATES
148 FIRST STREET BREMERTON, WA 98310
(206) 479-5600 FAX 479-5605
65 MARION STREET SEATTLE, WA 98104
(206) 622-6221

NATIONAL OCEANIC AND ATMOSPHERIC ADMINISTRATION
OFFICE OF NOAA CORPS OPERATIONS

SIGNATURE		DATE
DRAWN BY	C.FORSTER	6/14/93
CHECKED BY	C.STAEHLI	6/14/93
PROJ ENGR	C.STAEHLI	6/14/93
CHIEF ENGR	J.CARLSON	6/14/93

TAR AAA–FMP–002(93)

APPROVALS

SCALE: NONE

RAINIER S–221

GENERAL DATA
MA DESIGN S2–MA–72A

SIZE	NOAA CAGE	NOAA DRAWING NUMBER	REV
H	OYLJ5	S0900–2–2	A

CAD FILENAME DATA_A.DWG
SHEET 2 OF 11

SNUM
SQ FT
AREA

ART ANDERSON ASSOCIATES
148 FIRST STREET BREMERTON, WA 98310
(206) 479-5600 FAX 479-5605
65 MARION STREET SEATTLE, WA 98104
(206) 622-6221

NATIONAL OCEANIC AND ATMOSPHERIC ADMINISTRATION
OFFICE OF NOAA CORPS OPERATIONS

	SIGNATURE	DATE
DRAWN BY	C.FORSTER	6/14/93
CHECKED BY	C.STAEHLI	6/14/93
PROJ ENGR	C.STAEHLI	6/14/93
CHIEF ENGR	J.CARLSON	6/14/93

APPROVALS

RAINIER S-221
OUTBOARD PROFILE
STARBOARD
MA DESIGN S2-MA-72A

SIZE	NOAA CAGE	NOAA DRAWING NUMBER	REV
H	OYLJ5	S0900-2-2	A

TAR AAA-FMP-002 (93)
SCALE: NONE
CAD FILENAME PRFOTBDA.DWG
SHEET 3 OF 11
SNUM
SQ FT
AREA

28 FT WHIP ANTENNA
UPPER NOT UNDER COMMAND LIGHT
AIRCRAFT WARNING LIGHT
64'-0" ABOVE DWL
AFT MASTHEAD LIGHT
SURVEY LIGHT (P/S)
LOWER NOT UNDER COMMAND LIGHT
39'-3 1/4" ABOVE DWL
ANCHOR LIGHT
"A" FRAME (RAISED POSITION) STARBOARD ONLY
INCINERATOR
35 FT WHIP ANTENNA
TV ANTENNA
INMARSAT ANTENNA
AIRCRAFT WARNING LIGHT
35 FT WHIP ANTENNA
LOWER TOWING LIGHT
6 FT HI-FIX ANTENNA
79-7 7/8" ABOVE DWL
74'-7 7/8" ABOVE DWL
SURFACE SEARCH RADAR
66'-7 7/8" ABOVE DWL
UPPER TOWING LIGHT
62'-0" ABOVE DWL
LOWER TOWING LIGHT
56'-0" ABOVE DWL
FWD MASTHEAD LIGHT
49'-0" ABOVE DWL
RADAR
SIDE LIGHTS (P/S)
ANCHOR LIGHT
TELESCOPING JACK STAFF
BOSUN STORES DAVIT
CARGO CRANE (P/S)
NOAA
S 221
ACCOMMODATION LADDER P/S
110'-9" BETWEEN ℄ MASTS
℄ AFT MAST
110'-9" BETWEEN ℄ MAST
AT HOUSE TOP LEVEL
℄ FORE MAST
13'-0" DWL
17 16 15 14 13 12 11 10 9 8 7
13'-0" DWL
17 16 15 14 13 12 11 10 9 8 7
BOW THRUSTER TUNNEL
SAMPLING SEA CHEST STBD ONLY
LODAR SEA CHEST ℄
FP
FRAME SPACING 21" THROUGHOUT
LOW SUCTION SEA CHEST P/S
HIGH SUCTION SEA CHEST P/S
6"
FIRE PUMP SEACHEST PORT ONLY
BALLAST PUMP SEA CHEST STBD ONLY
3'-1 1/2"
120 115 110 105 100 95 90 85 80 75 70 65 60 55 50 45 40 35 30 25 20 15 10 5 0
33
A B C D E F G H

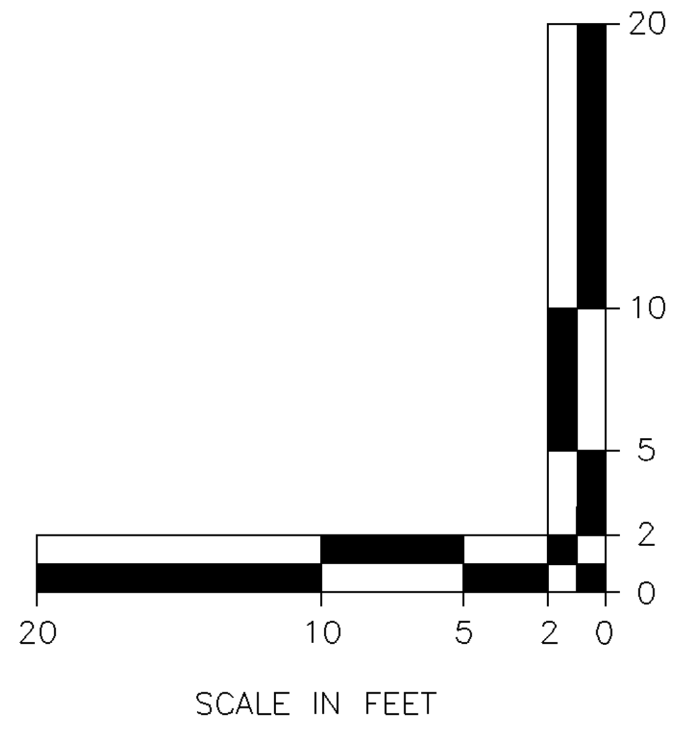
20
10
5
2
0
20 10 5 2 0

SCALE IN FEET

ART ANDERSON
A S S O C I A T E S
148FIRST STREET BREMERTON, WA 98310
(206) 479-5600 FAX 479-5605
65 MARION STREET SEATTLE, WA 98104
(206) 622-6221

NATIONAL OCEANIC AND ATMOSPHERIC ADMINISTRATION
OFFICE OF NOAA CORPS OPERATIONS

	SIGNATURE	DATE
DRAWN BY	C.FORSTER	6/14/93
CHECKED BY	C.STAEHLI	6/14/93
PROJ ENGR	C.STAEHLI	6/14/93
CHIEF ENGR	J.CARLSON	6/14/93

TARR AAA-TMP-002(93)

APPROVALS

SCALE: NONE

RAINIER S-221

INBOARD PROFILE

STARBOARD

MA DESIGN S2-MA-72A

SIZE	NOAA CAGE	NOAA DRAWING NUMBER	REV
H	OYLJ5	S0900-2-2	A

CAD FILENAME PRFINBDA.DWG
SHEET 4 OF 11

SNUM
SQ FT
AREA

28' WHIP ANTENNA
UPPER NOT UNDER COMMAND LIGHT
AIRCRAFT WARNING LIGHT
AFTER MASTHEAD LIGHT
SURVEY LIGHT P/S
LOWER NOT UNDER COMMAND LIGHT P/S
℄ OF AFT MAST
CRANE STOWED POSITION
BOOMREST
STERN LIGHT
FIXED POST CRANE ℄
ANCHOR LIGHT
ENSIGN STAFF
IL-PORT
200 GAL. GASOLINE TK. PORT ONLY
℄ OF CAPSTAN
W.T. HATCH
STAN
STEERING GEAR FLAT-P/S C-11-001
SURVEY STORES P/S C-10-001
IL PORT
VL-STBD HATCH OVER
14' FLAT
13'-0" DWL
D.O.A.P. TANK ℄ B-11-001
D.O. DEEP TANK PORT B-10-102
OCEANOGRAPHIC LAB-PORT D-08-102
SERV-LKR ℄ D-09-001
CREW QUARTERS PORT C-09-104 ℄ C-09-003
VL PORT
FLAT 12'-0" ABV ℄
PASS ℄ C-09-002
HEAD PORT C-09 -102
SHR ℄ C-09 -001
D.O. DEEP TANK PORT B-09-102 ℄ B-09-001
FAN ROOM-PORT D-08-102
CPO MESS PORT D-07-104
CPO PANTRY & DISHWASHING D-07-102
VL STBD ESCAPE TRUNK STBD
CREW QUARTERS PORT C-08-104 ℄ C-08-103
PASSAGE ℄ & STBD C-08-003
V.L. PORT
HEAD PORT C-08 -102
SHR ℄ C-08 -001
SHR PORT C-07 -003
SERV. LKR ℄ C-07 -109
PASS ℄ C-07 -002
PO QUARTERS PORT C-07-104
IL-STBD
CO2 BOTTLE RM-PORT C-07-102
GRAVITY RM ℄ C-07-008
STOARGE PORT B-08-102
CLEAN LINEN & STEWARD'S STORES - ℄ B-08-003
CHT ℄ B-08-002
D.O. TANK B-08-001
D.O. ℄ A-08-001
LO TANK (P)B-07-002
D.O. SER. TANK PORT B-07-104
SHAFT ALLEY B-07-001
V.L. STBD
TANK TOP 6'-0" ABV
D.O.D.B. TANK PORT A-07-102
CLEAN D.O. DAY TANK PORT B-07-102
DRAINWELL ℄ A-06-003
VOID ℄ A-06-004
PLENUM PORT
CARPENTER SHOP F-06-101
MACHINERY CASING F-06-001
FAN RM P/S
EMERGENCY GENERATOR-PORT E-06-102
SHIP'S OFFICE-PORT E-09-104
MACHINERY CASING E-06-001
MACH. ELEC. & BOAT ENG. SHOP P/S E-06-103
MAIN GALLEY-PORT D-06-102
MACHY CASING ℄ D-06-001
CONTROL RM ℄ C-06-002
IL-STBD
FLAT 11'-6" ABV ℄
MACHINERY SPACE-P/S C-06-001
IL-STBD
STAN.
MACHY SPACE P/S B-06-001
LL. STBD
STAN.
CPO SUMP PORT A-06-106
FLOOR PLT-4'-6" ABV ℄
COFFERDAM ℄ A-06-002
TANK TOP - 2'-8" ABV ℄
D.O.D.B. TANK-℄ A-06-001
UNDERWATER LOG RM A-06-104
TV ANTENNA
INMARSAT ANTENNA
PLENUM
FAN ROOM G-05-001
PYROTECHNIC LKR
PLENUM ℄
TOP OF HOUSE "G"
FLAG LKR
PIN RAIL
35' HY-FIX WHIP
6' HY-FIX WHIP
AIRCRAFT WARNING LIGHT & BLINKER TYPE SIGNAL LIGHT
5'-0"
SURFACE SEARCH RADAR NO. 1
ANEMOMETER
BLINKER TYPE SIGNAL LIGHTS AND AIRCRAFT WARNING LIGHTS-P&S
8'-0"
AIR WHISTLE (UNDER)
4'-7 7/8"
UPPER TOWING LIGHT
6'-0"
LOWER TOWING LIGHT
7'-0"
FWD MASTHEAD LIGHT
FORE MAST
LADDER-TAPER TO SUIT MAST
GYRO RPTP
STD MAGNETIC COMPASS REFLECTOR TYPE
18" DIA. SEARCHLIGHT-PORT
PLASTIC VENTURI
SLANTED WINDOWS
NAVIGATION BRIDGE DK-"F"
RADAR TRANS RM-PORT F-05-102
ELEV. STBD F-05-103
FIELD OFFICE-PORT F-04-104
PLOTTING ROOM P/S F-04-001
RADAR TRANSM RM. PORT F-04-102
PILOT HOUSE F-03-001
OFFICE ℄ E-05-003
PASS. E-05-002
STWY PORT
T/S-PORT F-05-102
ELEV.-STBD C-05-103
SR. OFFR SR. PORT E-04-106
PASSAGE ℄ E-04-001
EXEC OFFR. SR.-PORT E-04-104
HEAD PORT E-04-102
PASS ℄
STWY ℄
HEAD PORT E-03-104
C.O. GALLEY ℄ E-03-001
COMMANDING OFFICERS PORT E-03-102
PLENUM ℄
Q.M. STATION PORT D-05-110
GARBAGE RM. PORT D-05-104
JR. OFFR. PORT D-05-102
PASSAGE ℄ D-05-001
STWY PORT
ELEV. STBD D-05-101
PASSAGE ℄ D-05-002
TELEPHONE SW RM D-05-106
HEAD PORT D-04-108
MEDICAL OFFICER PORT D-04-106
PASSAGE PORT D-04-102
WARDROOM ℄ & STBD D-04-002
DISPENS'RY PORT D-04-104
STWY ℄
HEAD PORT D-03-104
SICK BAY PORT D-03-102
FAN RM ℄ D-03-001
STWY ℄
X.O. OFFICE PORT D-03-106
HATCH ℄
V.L. PORT
V.L. ℄
CPO QUARTERS PORT C-05-102 C-05-106
HEAD C-05-104
STWY PORT
VL STBD
CPO LOUNGE ℄ C-05-001
ELEV.-STBD C-05-101
CPO QUARTERS PORT C-04-104 C-04-106 C-04-108
STWY ℄
HEAD-PORT C-04-102
SHR. ROOM ℄ C-04-001
VL ℄
HEAD PORT C-03-104
PASSAGE ℄ C-03-002
SHR. RM ℄ C-03-003
STEWARDS QUARTERS PORT C-03-102 -C-03-301
DRY STORES PORT E-05-102
STAN.
AIR COND. & REEFER MACH SPACE ℄ B-05-001
ELEV.-STBD B-05-101
STWY PORT
FREEZE-PORT E-04-102
ICE CREAM PREP. & BUTCHER SHOP STBD B-04-103
PIPE TRUNK ℄
CHILL-STBD B-04-002
ESCAVE TRUNK ℄ B-04-001
COFFERDAM P/S B-03-105
V.L. PORT
DRAIN WELL-OVER
FRESH WATER TANK PORT B-03-102
COFFERDAM PORT B-03-104
COFFERDAM PORT B-03-106
TANK BOTTOM 6'-0" ABV ℄
TANK TOP 4'-0" ABV ℄
DRAINWELL-PORT A-05-104
DRAINWELL(P)A-04-106
D.O.D.B. TANK PORT A-05-102
NO. 2 SOUNDROOM ℄ A-05-001
REEFER DRAINWELL A-04-104
D.O.D.B. TANK PORT A-04-102
NO. 1 SOUND ROOM A-03-002
DO. DB TANK A-03-001
NO. 3 SOUND ROOM A-03-003
HYD CRANE-P&S
ANCHOR WINDLASS ℄
BOSUN STORES DAVIT
BOSUN'S STORES HATCH
ANCHOR LIGHT
JACK STAFF
SUPERSTRUCTURE DECK "E"
STORM OIL TK
PLENUM ℄
V.L. PORT
SURVEY STORES P/S D-01-001
PAINT LKR PORT D-02-104
BOSUN'S STORES D-01-001
STAN.
MAIN DECK "D"
CHAIN LKR PORT-C-02-102
SPARE PARTS PORT-C-02-104
SURVEY STORES P/S C-02-001
BOSUN'S STORES C-01-001
2ND DECK "C"
V.L. PORT
BOW THRUSTER MOTOR ROOM B-02-001
8'-0" FLAT
A-02-003 C.D.
C.D.
BOW THRUSTER A-02-002
D.O. DEEP TANK A-02-002
SUMP ACCESS
LODAR EQUIP RM B-02-002
GRATING
LODAR
V.L. ℄
SUMP B-02-002
DRAINWELL (P)
D.O. DEEP TANK B-02-001
DRAINWELL ℄
FOREDECK TANK B-01-001
13'-0" DWL
BASELINE "A"
120
6"
115
110
105
97
95
90
88
85
80
77
75
70
65
60
55
52
50
45
40
35
30
25
20
15
10
5
0
A
B
C
D
E
F
19'-9"
17'-6"
15'-9"
15'-9"
15'-0"
31'-6"
15'-9"
21'-0"
19'-3"
34'-6"
10'-6"
L.B.P. = 198'-9"
L.W.L. = 207'-0"
L.O.A. = 231'-0" APPROX
A.P.
W.T. & O.T.
W.T. & O.T.
W.T. & O.T.
W.T. & O.T.
W.T. & O.T.
W.T. & O.T. MVZ
W.T.
W.T.
W.T. & N.T.
W.T. & O.T.
W.T. & O.T.
W.T. N.T. 4 O.T.
W.T. & O.T.
21" FRAME SPACING THROUGHOUT
LBP = 198'-9"
LWL = 207'-0"
LOA = 231'-0" APPROX
F.P.

11 10 09 08 07 06 05 04 03 02 01

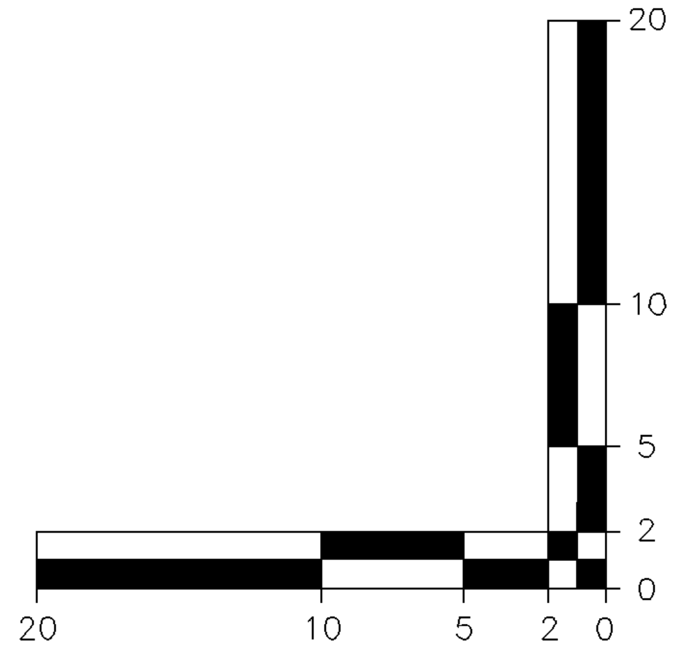

20
10
5
2
0
20
10
5
2
0

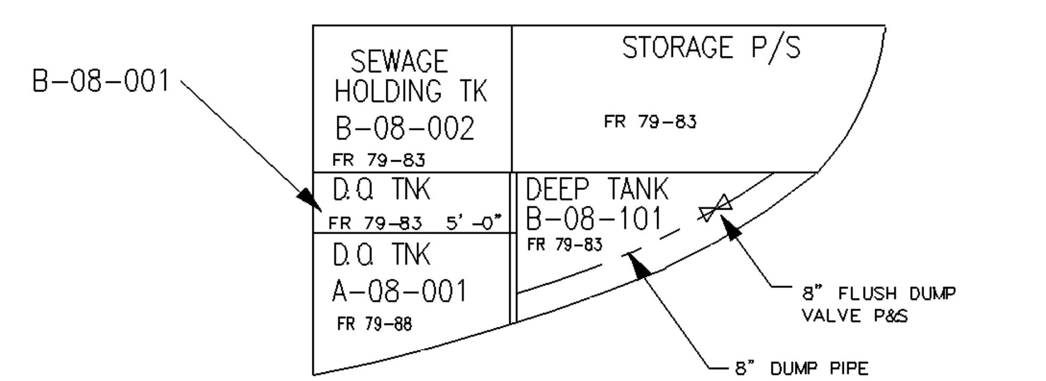
B-08-001
SEWAGE HOLDING TK
B-08-002
FR 79-83
STORAGE P/S
FR 79-83
D.Q TNK
FR 79-83 5'-0"
D.Q TNK
A-08-001
FR 79-88
DEEP TANK
B-08-101
FR 79-83
8" FLUSH DUMP VALVE P&S
8" DUMP PIPE P&S

FRAME 83
LOOKING FWD

D.O. TANK
A-08-001
D.B TANK DIESEL OIL
OR S.W. BALLAST
A-07-102
A-07-101
D.B TANK DIESEL OIL
OR S.W. BALLAST
C.P. OIL SUMP
A-06-106
VOID (OVER)
A-06-004
COFFERDAM
A-06-002
UNDERWATER
LOG ROOM A-06-104
D.B TANK DIESEL OIL
OR S.W. BALLAST
A-06-102
D.B TANK DIESEL OIL
OR S.W. BALLAST
A-06-001
LUBE OIL TANK
A-06-003
PITCH CONTROL
OIL SUMP
A-06-103
D.B TANK DIESEL OIL
OR S.W. BALLAST
A-06-101
D.B. TANK DIESEL OIL
OR S.W. BALLAST
A-05-102
#2 SOUND RM.
A-05-001
DRAINWELL
A-05-104
ELEV
PIT OVER
D.B.TANK DIESEL OIL
OR S.W. BALLAST
A-05-101
PREP RM
DRAINWELL
A-04-106
D.B.TANK DIESEL OIL
OR S.W. BALLAST
A-04-102
REEFER DRAIN TNK
A-04-104
GALLEY DRAIN
TNK A-04-103
D.B TANK DIESEL OIL
OR S.W. BALLAST
A-04-101
DRAINWELL
OVER
D.B.TANK DIESEL OIL
OR S.W. BALLAST
A-03-001
#1 SOUND RM.
A-03-002
NO. 3 SOUND ROOM
A-03-003
COFFERDAM OVER TUNNEL
A-02-003
BOW THRUSTER
TUNNEL
BOW THRUSTER TUNNEL
A-02-002
V.L.
LODAR SPACE
A-02-002
DEEP TANK DIESEL OIL
A-02-002
20
115
110
105
100
95
90
85
80
75
70
65
60
55
50
45
40
35
30
25
20
15
10
5
0
A B C D E F G H
10
09
08
07
06
05
04
03
02
01

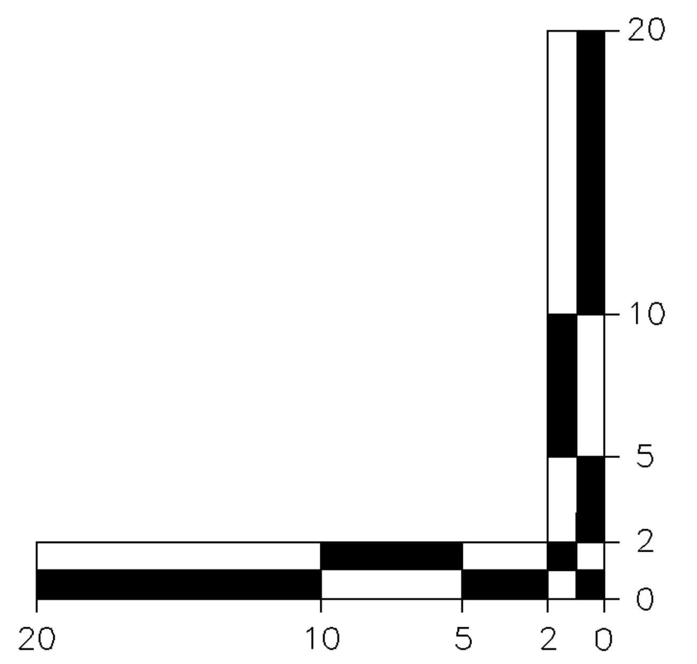
20
10
5
2
0
20
10
5
2
0

SCALE IN FEET

ART ANDERSON ASSOCIATES 148 FIRST STREET BREMERTON, WA 98310 (206) 479-5600 FAX 479-5605 65 MARION STREET SEATTLE, WA 98104 (206) 622-6221	NOAA	NATIONAL OCEANIC AND ATMOSPHERIC ADMINISTRATION OFFICE OF NOAA CORPS OPERATIONS	
SIGNATURE	DATE	APPROVALS	RAINIER S-221
DRAWN BY C.FORSTER	6/14/93		INNERBOTTOM
CHECKED BY C.STAEHLI	6/14/93		"A" DECK
PROJ ENGR C.STAEHLI	6/14/93		MA DESIGN S2-MA-72A
CHIEF ENGR J.CARLSON	6/14/93		
			SIZE H · NOAA CAGE OYLJ5 · NOAA DRAWING NUMBER S0900-2-2 · REV A
TAR AAA-FMP-002(93)		SCALE: NONE	CAD FILENAME DECK_A_A.DWG · SHEET 5 OF 11

SNUM
SQ FT
AREA

DEEP TANK
DIESEL OIL
B-10-102
DEEP TANK
DIESEL OIL
B-09-102
DEEP TANK
DIESEL OIL
B-08-102
HALF DECK STORAGE
(OVER) P/S
SEWER
TANK (OVER)
B-08-002
DIESEL OIL
SERVICE TANK
B-07-104
SHAFT
ALLEY
B-07-001
DRY STORES
B-05-102
A.C. & REFER
MACHINERY
B-05-001
FIRE
PUMP #2
RAW WATER PMP
SS AIR RECEIVER
EVAPORATOR
FIRE
PUMP #1
SS AIR COMP
TNK
FS
2
FIRE & BILGE PMP
R.O.T.M.H.
SHELVES
D.O.
TANK
B-08-001
MSD
LUBE
OIL TK
B-07-002
LUBE
OIL TK
B-07-106
DAY
TANK
B-07-102
DAY
TANK
B-07-101
℄ SHAFT
RAW WATER TNK
REDUCTION
GEAR
DO PUMP
ENGINE
WORK BENCH
ROD METER
6" STAN.
F.O. PURIFIER
R.T.
UP
V.L.
2 P/S
H.S.
W.T.D
BILGE &
BALLAST PMP
STARTING
AIR COMP
#1
#2
SEWAGE PUMPS
MSD LIFT
STATION
REF COMPRESSOR (5)
W/ RECEIVERS OVER
R.W.T.
Q.A.H.
B-05-101
SERV.
ELEV.
FREEZER
B-04-102
HSWTD
STAN.
16" DIA. FWTBMH
BUTCHER
SINK
ICE
CUBER
ICE MACH
FREEZER
PIPE STAN.
QAES
COFFERDAM
B-03-106
COFFERDAM
(UNDER)
B-03-104
FRESH
WATER TANK
B-03-102
BOW THRUSTER
MOTOR ROOM
B-02-003
SUMP
(OVER)
B-02-002
FLAT 8'-0"
ABV. B.L.
GRAT'G
8'-0"
ABV. B.L.
RWTBMH P/S
RQAWTMH
DEEP TANK
DIESEL OIL
B-02-001
FOREPEAK
TANK
B-01-001
A B C D E F G H
120 115 110 105 100 95 90 85 80 75 70 65 60 55 50 45 40 35 30 25 20 15 10 5 0
B-04-001
TRUNK
B-02-002
LODAR EQUIPMENT
ROOM
SPARE PARTS
STOWAGE
B-11-001
AFTER PEAK TANK
DIESEL OIL
B-10-101
DEEP TANK
DIESEL OIL
B-09-001
DEEP TANK
DIESEL OIL
B-09-101
DEEP TANK
DIESEL OIL
B-08-003
CLEAN LINEN &
STEWARD STORES
B-08-101
DEEP TANK
DIESEL OIL
B-07-103
DIESEL OIL
SERVICE TANK
SEWAGE HOLDING (OVER)
B-08-002
B-06-001
MACHINERY
SPACE
FIXED BALLAST
STBD ONLY
B-05-103
DRY STORES
B-04-103
ICE CREAM PREP.
& BUTCHER SHOP
B-04-002
CHILL 35°
B-03-001
COFFERDAM
B-03-105
COFFERDAM
B-03-103
COFFERDAM
(UNDER)
B-03-101
FRESH
WATER TANK

NOTE: ① INDICATES A MANHOLE W/VERTICAL LADDER

② INDICATES A ROTBMH 15" × 23" W/VERTICAL LADDER

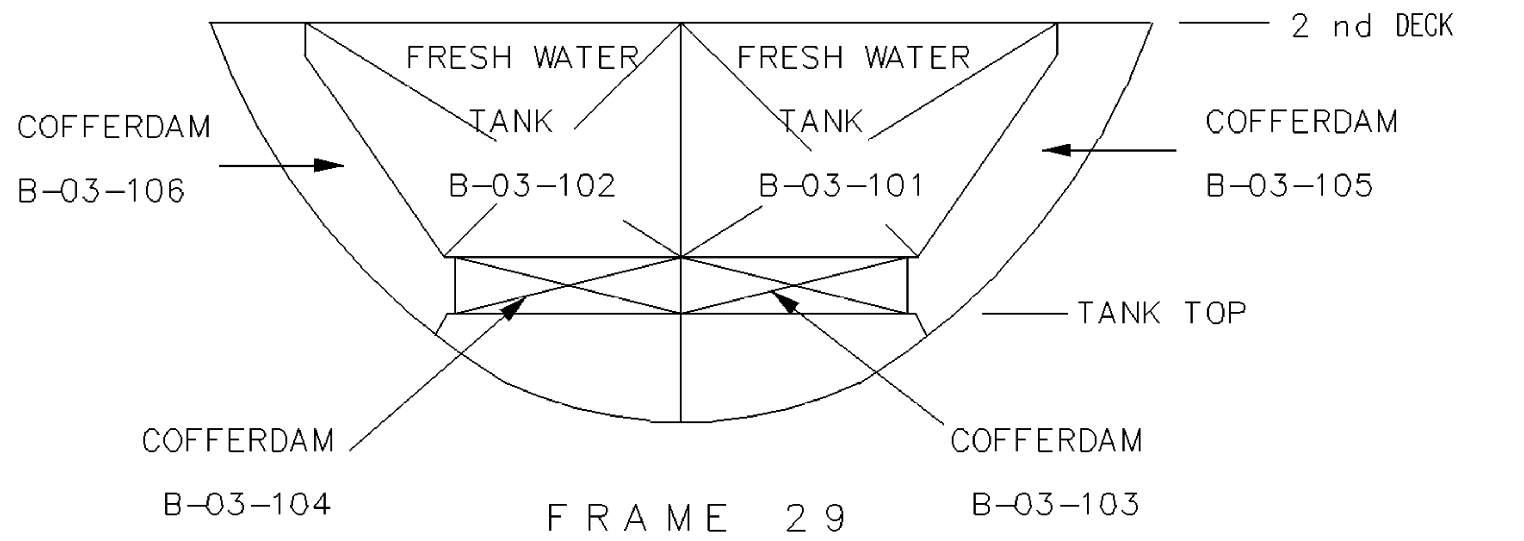
2 nd DECK
COFFERDAM
B-03-106
FRESH WATER
TANK
B-03-102
FRESH WATER
TANK
B-03-101
COFFERDAM
B-03-105
TANK TOP
COFFERDAM
B-03-104
COFFERDAM
B-03-103

FRAME 29

LOOKING FWD.
ALL FR. 20-29

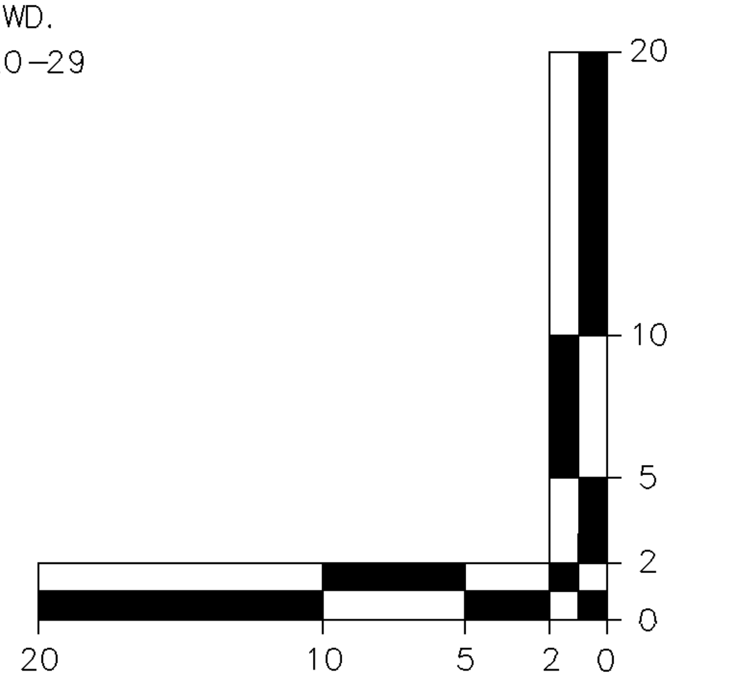
20
10
5
2
0
20
10
5
2
0

SCALE IN FEET

ART ANDERSON
ASSOCIATES
148 FIRST STREET BREMERTON, WA 98310
(206) 479-5600 FAX 479-5605
65 MARION STREET SEATTLE, WA 98104
(206) 622-6221

NATIONAL OCEANIC AND ATMOSPHERIC ADMINISTRATION
OFFICE OF NOAA CORPS OPERATIONS

SIGNATURE		DATE	APPROVALS
DRAWN BY	C.FORSTER	6/14/93	
CHECKED BY	C.STAEHLI	6/14/93	
PROJ ENGR	C.STAEHLI	6/14/93	
CHIEF ENGR	J.CARLSON	6/14/93	
TAR AAA-FMP-002(93)			SCALE: NONE

RAINIER S-221

TANK TOP

"B" DECK

MA DESIGN S2-MA-72A

SIZE	NOAA CAGE	NOAA DRAWING NUMBER	REV
H	OYLJ5	S0900-2-2	A

CAD FILENAME DECK_B_A.DWG SHEET 6 OF 11

SNUM

SQ FT

AREA

V.L. TO ESCAPE HATCH P/S
C-08-104 CHIEF PHARMACIST Q.M. SURVEYORS
C-09-102 HEAD
C-08-102 HEAD
C-09-104 FIREMEN
C-07-104 QUATERMASTERS
C-07-003
CO2 BOTTLE ROOM C-07-102
GRAVITY ROOM
C-07-008
STEERING GEAR FLAT
C-11-001
CAPSTAN
V. L.
SURVEY STORES C-10-001
FS 11
UP
FIREMEN MACH MATE
C-09-003
PASSAGE C-09-002
FS 10
C-08-004 SEAMEN
C-08-005 SEAMEN
C-08-001 SHOWERS
PASSAGE C-07-002
PASSAGE C-08-003
FS 9
UP
DN
BC
DESK
FC
WF
SEAMEN C-09-103
BOATSWAINS C-08-103
-2-
-1-
120
115
110
105
100
95
90
85
80
75
70
65
60
55
50
45
40
35
30
25
20
15
10
5
0
C-09-001 SHOWERS
C-09-101 HEAD
C-08-101 HEAD
C-07-105 MACH MATES
C-07-109 ESCAPE TRUNK
C-07-103 ELEC TECH
HEAD C-07-101
CO2
RAW WTR PUMP
SS GEN
BOILER
BOILER
STEAM GEN
FS 7
MACHINERY SPACE
CABINET
SS SWBD
ENGR CONTROL C-06-002
CONTROL CONSOLE
MAKE-UP FEED TANK
N2 PRESSURIZED HW TANK
FRESH WTR TK #1 HYDROPNEUMATIC
STARTING AIR RECEIVERS
#3
#2
#1
HW STOR TNK
LO TANK
LO TANK
C-06-101
C-06-001
AIR CONTROL RECEIVER
AIR CONTROL COMPRESSOR
PITCH CNTRL OIL HEAD TANK
CONDENSOR
C-05-102 CHIEF MACHINIST
DATAWELL C-05-001
C-05-104 HEAD
C-05-106 CHIEF MACHINIST SPARE
C-04-108 CHIEF ELECTRONIC TECH
CHIEF MACH MATE (ELECTRICAL) C-04-106
C-04-104 CHIEF MACH MATE QUATERMASTER
C-03-102 CHIEF STEWARD STEWARDS 2ND CLASS
CPO LOUNGE C-05-001
CH
SERVICE ELEV. C-05-101
FS 6
PASSAGE C-04-002
C-04-102 HEAD
C-04-001 SHOWER
PASSAGE C-04-003
C-03-104
PASSAGE C-03-002
FS 5
FS 4
C-03-101 STEWARDSMEN
C-04-105 CHIEF YEOMEN
C-05-107 CHIEF ELECT TECH SPARE
C-05-105 HEAD
C-05-103 CHIEF BOSUN'S
C-04-107 CHIEF Q.M. SURVEYORS
C-04-101 CHIEF CARPENTER CHIEF ELECT TECH
C-03-003 SHOWER
C-03-001 CHIEF STEWARD STEWARDS 2ND CLASS
OT & WT BHD (UNDER)
C-02-001 SURVEY STORES
MANHOLE
C. D.
C. D.
C-02-102 CHAIN LKR
C-02-104 SPARE PARTS STOWAGE
C-01-001 BOSUN'S STORES
C-02-103 SPARE PARTS STOWAGE
C-02-101 CHAIN LKR
DRAINWELL SUMP (UNDER)
A B C D E F G H

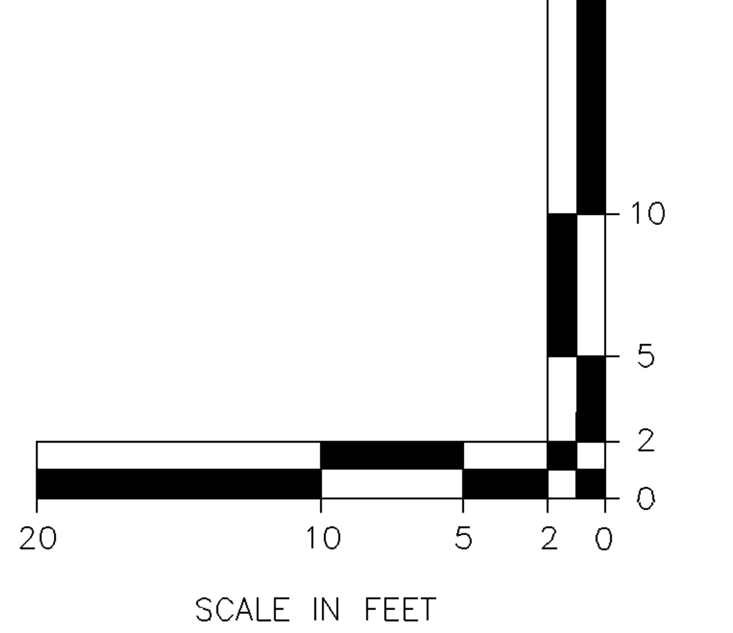
20
10
5
2
0
20
10
5
2
0
SCALE IN FEET

ART ANDERSON ASSOCIATES
148 FIRST STREET BREMERTON, WA 98310
(206) 479-5600 FAX 479-5605
65 MARION STREET SEATTLE, WA 98104
(206) 622-6221

NATIONAL OCEANIC AND ATMOSPHERIC ADMINISTRATION
OFFICE OF NOAA CORPS OPERATIONS

SIGNATURE		DATE
DRAWN BY	C.FORSTER	6/14/93
CHECKED BY	C.STAEHLI	6/14/93
PROJ ENGR	C.STAEHLI	6/14/93
CHIEF ENGR	J.CARLSON	6/14/93

TAR AAA-FMP-002(93)

APPROVALS

SCALE: NONE

RAINIER S-221

SECOND DECK
"C" DECK
MA DESIGN S2-MA-72A

SIZE	NOAA CAGE	NOAA DRAWING NUMBER	REV
H	OYLJ5	S0900-2-2	A

CAD FILENAME DECK_C_A.DWG
SHEET 7 OF 11

SNUM
SQ FT
AREA

PANTRY & DISHWASHING
D-07-102
SHIPS OFFICERS MESS
D-07-104
SEWAGE
MOORING RING
P/S
9" BITT
P/S
MOORING RING
P/S
LIFEBUOY W/
FAITH LINE &
WATERLITE
FOLDING
BULWARK
GAS
STORAGE
MOORING RING
P/S
9" BITT
WORK BOAT
FOLDING
BULWARK
P/S
14" CLOSED
CHOCK
9" BITT
CAMEL
STORAGE
W.T. HATCH
COVER
UP
WTD
FS
20
DN
WORKBENCH
OCEANOGRAPHIC
LAB
D-09-102
TABLE
WORKBENCH
FAN ROOM
D-08-102
TABLE
COUNTER
DF
LOWER LADDER
SECT STOWED
STORM RAIL
P/S
OVENS UNDER
BULWARK
P/S
INTERNATIONAL
FIRE CONNECT
CONVCTION STEAMER
& STM KETTLE (5 GAL)
STEAM
COND
BULWARK
DOOR
P/S
FW
Q. M. STATION
D-05-110
DIVE LOCKER
D-05-108
GARBAGE RM
D-05-104
TELEPHONE SWITCH RM
D-05-106
JR OFFICERS
D-05-102
D-05-001
D-04-108
HEAD
MED OFFICE
D-04-106
DISPENSARY
D-04-104
D-03-104
HEAD
SICK BAY
D-03-102
X.O. OFFICE
D-03-106
PAINT LKR
D-02-104
CHAIN LKR
C-02-102 P
C-02-101 S
D.F.
FRYER
STOVE
GRIDDLE
CONVN
OVEN
(2)
REFER
REFER
MIXER
MAIN GALLEY
D-06-102
CANTEEN
FS 18
PASSAGE
D-05-002
MACHINERY CASING
D-06-001
RADAR
MGS(2)
UP
DN
-2-
-2-
2
DESK
PASSAGE
D-04-102
SOFA
TABLE
DN
DN
UP
FAN ROOM
D-03-001
FLUSH HATCH
SURVEY STORES
D-02-001
WT BHD
P/S
ANCHOR
WINDLASS
HYD UNIT
BOSUN'S STORES
D-01-001
STORM OIL
TANK
A B C D E F G H
120
115
110
105
100
95
90
85
80
75
70
65
60
55
50
45
40
35
30
25
20
15
10
5
0
CAPSTAN
CRANE
FDN
WTD
WTD
SINK
FS
19
PASSAGE
D-07-101
WTD
FIRE SCREEN
DRINKING
FOUNTAIN
FS 15
FS 14
PASSAGE
D-03-101
WTD
FS 13
STEAM
IRON
LINEN
CLOSET
DN
DN
X
DN
DN
SINK
DRYER
IRON BD
LAUNDRY
D-08-101
D
(2)
W
W
W
WASHER
WORK BENCH
BOSUN'S
WORKSHOP
TV
TECH. MESS
TABLE
TABLE
TABLE
FS 16
CREWS MESS D-06-103
TABLE
TABLE
TV
WARDROOM D-04-002
TABLE
SEATS 14
CAB
CAB
2
2
SURVEY
D-02-105
9" BITT
9" BITT
MOORING RING
MOORING
RING
P/S
INCINERATOR
MOORING
RING P/S
FOLDING
BULWARK
OCEANOGRAPHIC WINCH
HINGED "A" FRAME
LIFEBOUY W/
WATERLITE P/S
ENGINEERING
OFFICE
ESCAPE TRUNK
FS 17
LIFEBOUY W/
WATERLITE P/S
FUELING STATION
2'-8" HI JOINER BULKHEAD
W/4' SLIDING PARTITION ABOVE
FUEL
STEAM
INTERNATIONAL FIRE CONNECT
FW
QAWT DOOR P/S
D-06-101
HEAD
Q.M. STATION DAMAGE CONTROL LKR 01
D-05-107
ELEV MACHRY
D-05-105
WARDROOM GALLEY
D-05-103
SERVICE ELEVATOR
D-05-101
D-03-107
JR OFFICERS
D-03-105
HEAD
D-03-103
JR OFFICERS
GUN SAFE
MAGAZINE
D-02-103
20
10
5
2
0
20
10
5
2
0
SCALE IN FEET

ART ANDERSON
ASSOCIATES
148 FIRST STREET BREMERTON, WA 98310
(206) 479-5600 FAX 479-5605
65 MARION STREET SEATTLE, WA 98104
(206) 622-6221

NATIONAL OCEANIC AND ATMOSPHERIC ADMINISTRATION
OFFICE OF NOAA CORPS OPERATIONS

	SIGNATURE	DATE
DRAWN BY	C.FORSTER	6/14/93
CHECKED BY	C.STAEHLI	6/14/93
PROJ ENGR	C.STAEHLI	6/14/93
CHIEF ENGR	J.CARLSON	6/14/93

TAR AAA-FMP-002(93)

APPROVALS

SCALE: NONE

RAINIER S-221

MAIN DECK

"D" DECK

MA DESIGN S2-MA-72A

SIZE	NOAA CAGE	NOAA DRAWING NUMBER	REV
H	OYLJ5	S0900-2-2	A

CAD FILENAME DECK_D_A.DWG
SHEET 8 OF 11

SNUM
SQ FT
AREA

GRAVITY DAVIT (TYP)
29' JENSEN SURVEY LAUNCHES (OVER)
SHIP'S OFFICE E-05-104
EMERGENCY GENERATOR ROOM E-06-102
HEAD E-05-102
SENIOR OFFICER E-04-106
EXEC OFFICER E-04-104
HEAD E-04-102
HEAD E-03-104
COMMANDING OFFICER'S STATEROOM E-03-102
MOORING RING P/S
BULWARK P/S
PLATFORM
MOORING RING P/S
DN
NESTED WORKBOATS
NESTED WORKBOATS
RESERVE FOR DECK CARGO
UP
PLENUM
BENCH
EMERGENCY GENERATOR
STORM RAIL P/S
EMERGENCY SWITCHBOARD
MACHINERY CASING
E-06-001
DRILL PRESS
LATHE
POWER HACKSAW
WORK BENCH
VENT TRUNK
FS 25
FS 24
FS 23
FS 21
E-05-003
PASSAGE E-05-002
SERVICE ELEVATOR E-05 -101
BOAT BOOM EQUIP. LKR. UNDER STAIR P/S
UP
DN
1
1
1
1
PASSAGE E-04-002
PASSAGE E-04-001
DN
UP
GALLEY
TV
FOLDING TABLE
DC LKR
FIRE HOSE CABINET
PLENUM P/S
BOAT WINCH P/S (6 PL)
ACCOM. LADDER WINCH P/S
24" SCUTTLE
WT STEEL COVER
VENT TRUNK
CRANE P/S
9" BITT P/S
ANCHOR WINDLASS
HAWSER PIPE W/ ANCHOR FAIRLEAD P/S
10" ROLLER CHOCK P/S
JACK STAFF
FAIRLEAD P/S
DAVIT
9" BITT P/S
10" CLOSED CLOCK
BULWARK DOOR P/S
LIFEBUOY P/S
DUCT SUPPLY P/S
DUCT SUPPLY W/MANUAL P/S
ACCOMMODATION LADDER P/S
105
100
95
90
85
80
75
70
65
60
55
50
45
40
35
30
25
20
15
10
5
0
E-06-103 MACHINE, ELECTRICAL & BOAT ENGINE SHOP
E-06-101 BATTERY LOCKER
E-05-105 EXEC OFFICER'S OFFICE
E-05-103 HEAD
E-04-105 NAV OFFICER
E-04-103 CHIEF ENGINEER
BOAT BOOM STOWED INTO BULWARK P/S
E-04-101 HEAD
E-03-101 COMMANDING OFFICER'S CABIN

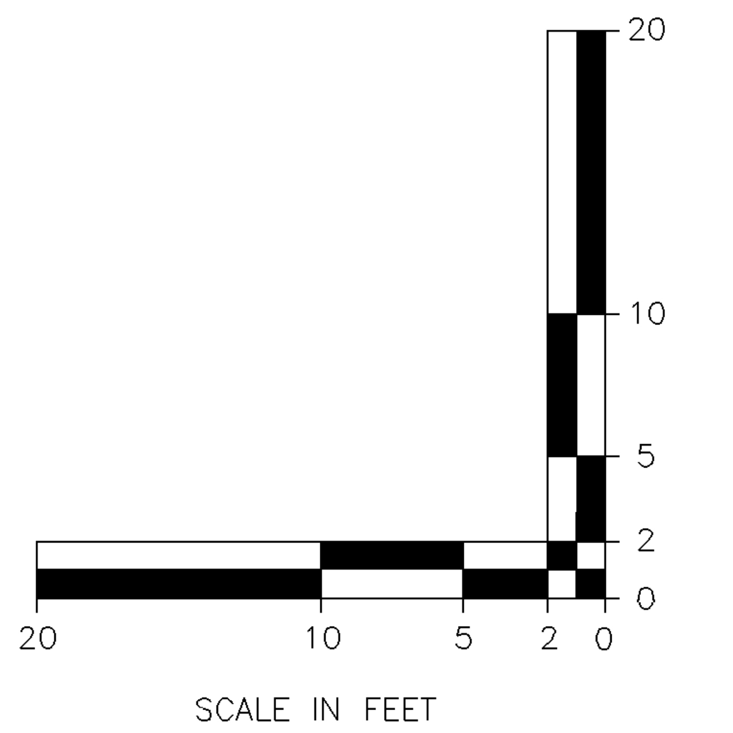
20
10
5
2
0
20
10
5
2
0

SCALE IN FEET

ART ANDERSON ASSOCIATES
148 FIRST STREET BREMERTON, WA 98310
(206) 479-5600 FAX 479-5605
65 MARION STREET SEATTLE, WA 98104
(206) 622-6221

NATIONAL OCEANIC AND ATMOSPHERIC ADMINISTRATION
OFFICE OF NOAA CORPS OPERATIONS

SIGNATURE	DATE	APPROVALS
DRAWN BY C.FORSTER	6/14/93	
CHECKED BY C.STAEHLI	6/14/93	
PROJ ENGR C.STAEHLI	6/14/93	
CHIEF ENGR J.CARLSON	6/14/93	
TAR AAA-FMP-002(93)		SCALE: NONE

RAINIER S-221

SUPERSTRUCTURE

"E" DECK

MA DESIGN S2-MA-72A

SIZE	NOAA CAGE	NOAA DRAWING NUMBER	REV
H	OYLJ5	S0900-2-2	A

CAD FILENAME DECK_E_A.DWG
SHEET 9 OF 11

SNUM
SQ FT
AREA

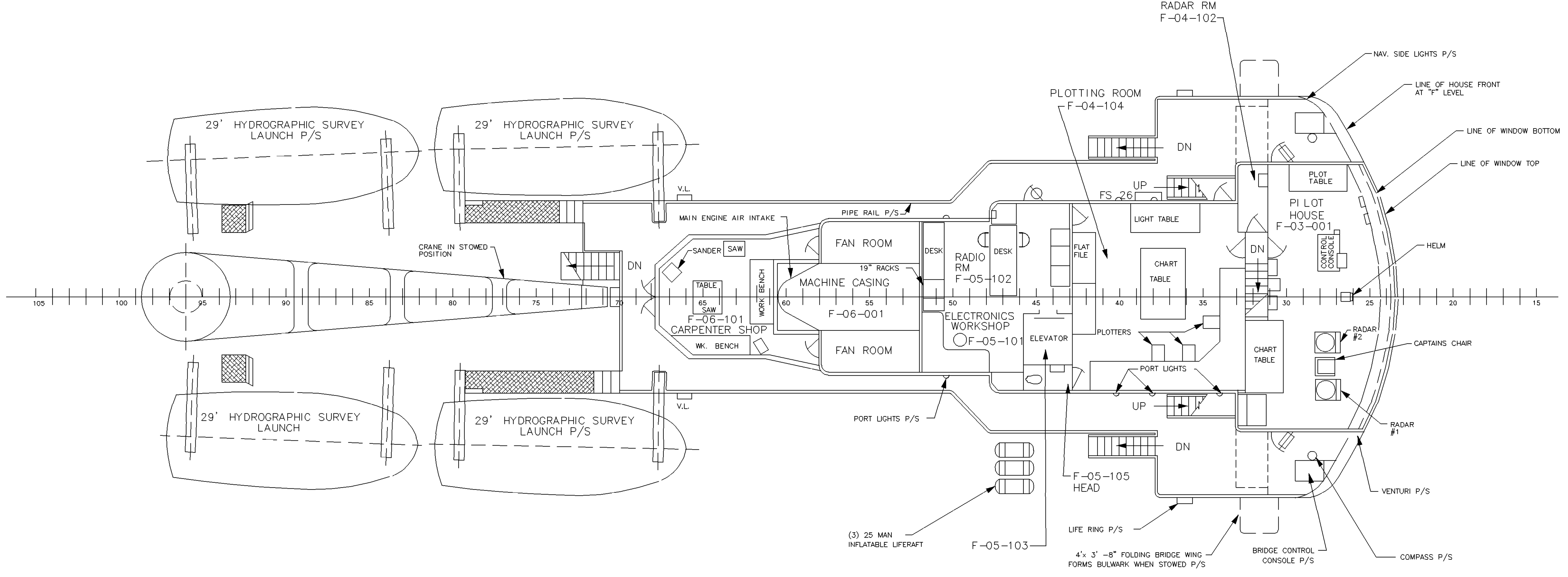
29' HYDROGRAPHIC SURVEY LAUNCH P/S
29' HYDROGRAPHIC SURVEY LAUNCH P/S
29' HYDROGRAPHIC SURVEY LAUNCH
29' HYDROGRAPHIC SURVEY LAUNCH P/S
CRANE IN STOWED POSITION
V.L.
V.L.
DN
MAIN ENGINE AIR INTAKE
PIPE RAIL P/S
SANDER
SAW
TABLE
SAW
WORK BENCH
F-06-101
CARPENTER SHOP
WK. BENCH
FAN ROOM
19" RACKS
MACHINE CASING
F-06-001
FAN ROOM
DESK
RADIO RM
F-05-102
DESK
ELECTRONICS WORKSHOP
F-05-101
ELEVATOR
FLAT FILE
PLOTTING ROOM
F-04-104
RADAR RM
F-04-102
DN
UP
FS 26
LIGHT TABLE
CHART TABLE
PLOTTERS
PORT LIGHTS
UP
DN
CHART TABLE
DN
PLOT TABLE
PI LOT HOUSE
F-03-001
CONTROL CONSOLE
NAV. SIDE LIGHTS P/S
LINE OF HOUSE FRONT AT "F" LEVEL
LINE OF WINDOW BOTTOM
LINE OF WINDOW TOP
HELM
RADAR #2
CAPTAINS CHAIR
RADAR #1
VENTURI P/S
COMPASS P/S
BRIDGE CONTROL CONSOLE P/S
4'x 3' -8" FOLDING BRIDGE WING FORMS BULWARK WHEN STOWED P/S
LIFE RING P/S
F-05-105
HEAD
F-05-103
(3) 25 MAN INFLATABLE LIFERAFT
PORT LIGHTS P/S
105
100
95
90
85
80
75
70
65
60
55
50
45
40
35
30
25
20
15

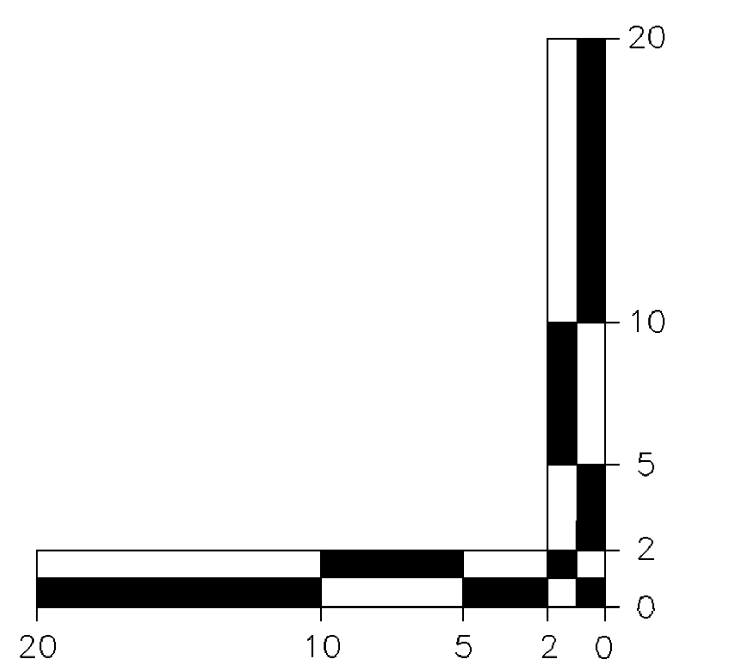
20
10
5
2
0
20
10
5
2
0

SCALE IN FEET

ART ANDERSON ASSOCIATES
148 FIRST STREET BREMERTON, WA 98310
(206) 479-5600 FAX 479-5605
65 MARION STREET SEATTLE, WA 98104
(206) 622-6221

NATIONAL OCEANIC AND ATMOSPHERIC ADMINISTRATION
OFFICE OF NOAA CORPS OPERATIONS

SIGNATURE		DATE
DRAWN BY	C.FORSTER	6/14/93
CHECKED BY	C.STAEHLI	6/14/93
PROJ ENGR	C.STAEHLI	6/14/93
CHIEF ENGR	J.CARLSON	6/14/93

APPROVALS

RAINIER S-221

NAVIGATION BRIDGE

"F" DECK

MA DESIGN S2-MA-72A

SIZE	NOAA CAGE	NOAA DRAWING NUMBER	REV
H	OYLJ5	S0900-2-2	A

TAR AAA-FMP-002(93)

SCALE: NONE

CAD FILENAME DECK_F_A.DWG

SHEET 10 OF 11

SNUM

SQ FT

AREA

ANTENNA P/S
BOAT FALL P/S
NAV SIDE LIGHTS P/S
SEARCH LIGHT W/PLATFORM P/S
VENTURI, 4'-6" HIGH
18" DIA SEARCH LIGHT P/S
SWITCH ANTENNA COUPLER
SWITCH ANTENNA
DECK LIGHTS
VENT
PIPE RAIL
3 FT HI. P/S
DN
SIGNAL LIGHT P/S
ANTENNA P/S
YARDARM OVER
YARD ARM
OVER
REFLECTOR COMPASS
V.L.
MACHINERY
CASING
FAN ROOM
G-05-001
FLAG LKR.
FOREMAST
105
100
95
90
85
80
75
70
65
60
55
50
45
40
35
30
25
20
15
10
5
0
A B C D E F G H
AIRCRAFT WARNING LIGHT
SHORING
LOCKER
PYROTECHNIC LKR
GYRO
RADAR PLATFORM ABOVE
DN
LIFE PRESERVERS P/S

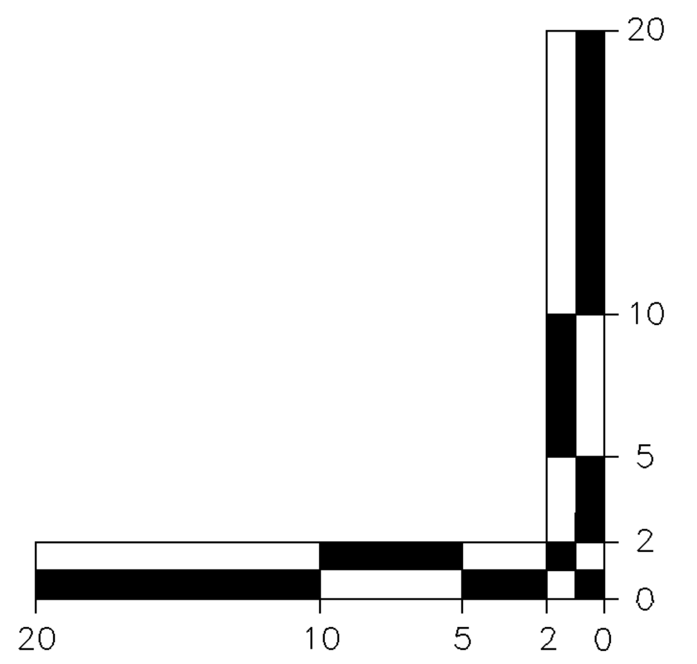
20
10
5
2
0
20
10
5
2
0

SCALE IN FEET

ART ANDERSON
ASSOCIATES
148 FIRST STREET BREMERTON, WA 98310
(206) 479-5600 FAX 479-5605
65 MARION STREET SEATTLE, WA 98104
(206) 622-6221

NATIONAL OCEANIC AND ATMOSPHERIC ADMINISTRATION
OFFICE OF NOAA CORPS OPERATIONS

SIGNATURE	DATE	APPROVALS	RAINIER S-221
DRAWN BY C.FORSTER	6/14/93		TOP OF HOUSE
CHECKED BY C.STAEHLI	6/14/93		"G" DECK
PROJ ENGR C.STAEHLI	6/14/93		MA DESIGN S2-MA-72A
CHIEF ENGR J.CARLSON	6/14/93		
TAR AAA-FMP-002 (93)		SCALE: NONE	

SIZE	NOAA CAGE	NOAA DRAWING NUMBER	REV
H	OYLJ5	S0900-2-2	A

CAD FILENAME DECK_G_A.DWG
SHEET 11 OF 11

SNUM
SQ FT
AREA